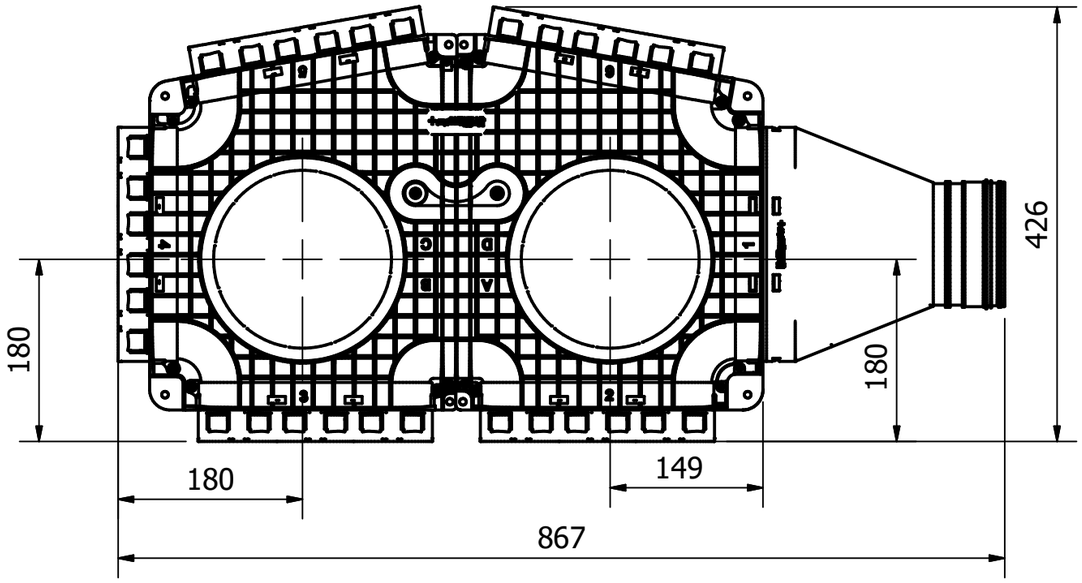

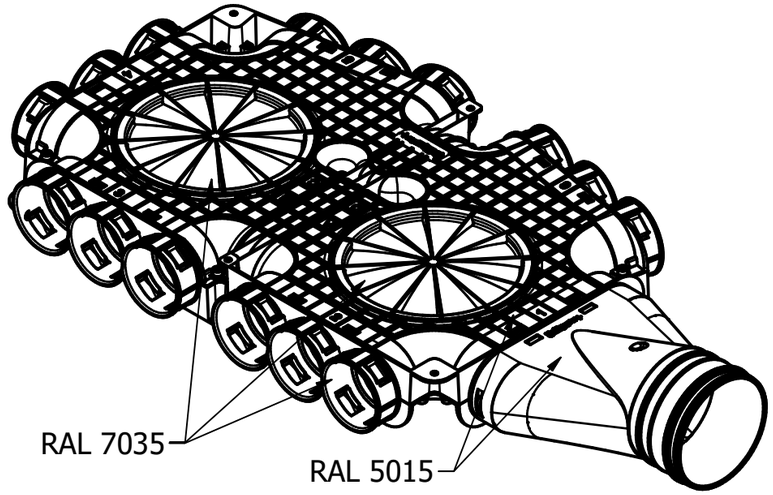

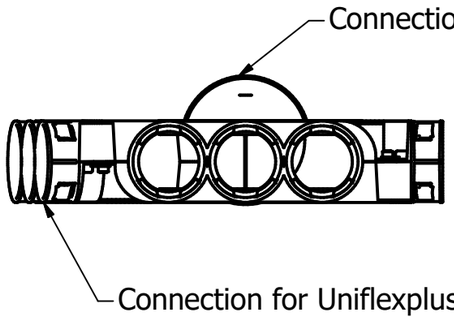

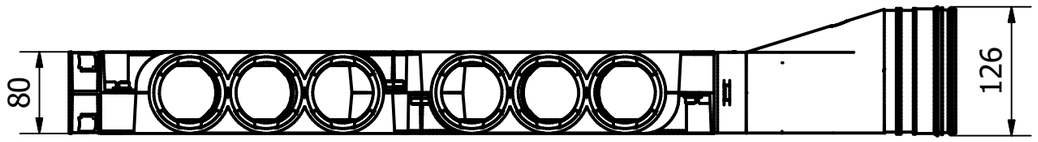

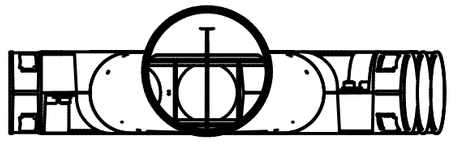

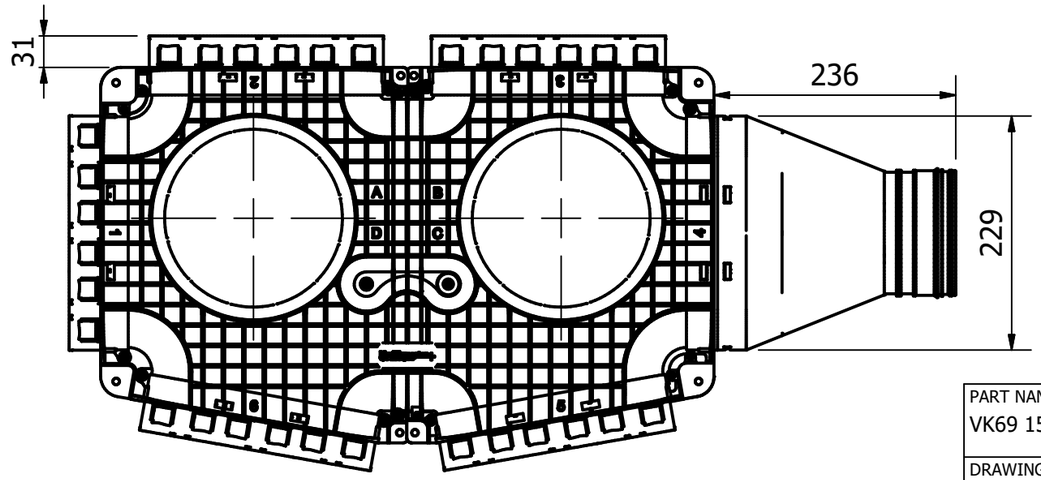

PART NAME VK69 15 H125 Verd. 1xK 15xØ69 4xD HØ125				
DRAWING NUMBER VENTILAIR 2005000503	MATERIAL Mixed	REVISION HISTORY		
		REV	DATE	DESCRIPTION	BY
COLOUR RAL 7035/5015	DATE 20-2-2020			
SCALE 1:6	PROJ A-A	UNITS mm	SIZE A3	DRAWN BY Vent-Axia